# CIG2 CURB INLET

**2'-3" X 2'-4" X 3'-6" I.D.**
**(NOMINAL DIMENSIONS)**
**MODEL# CIG2-48**

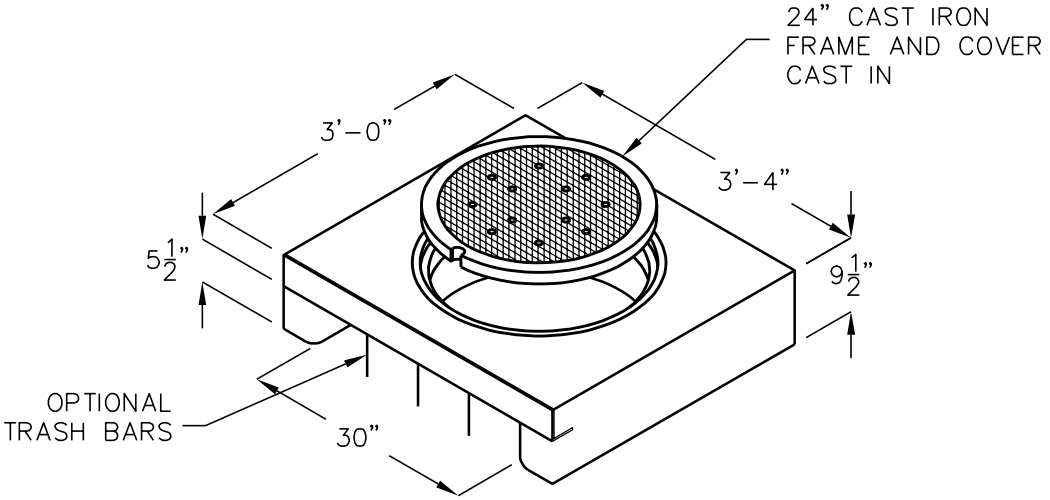


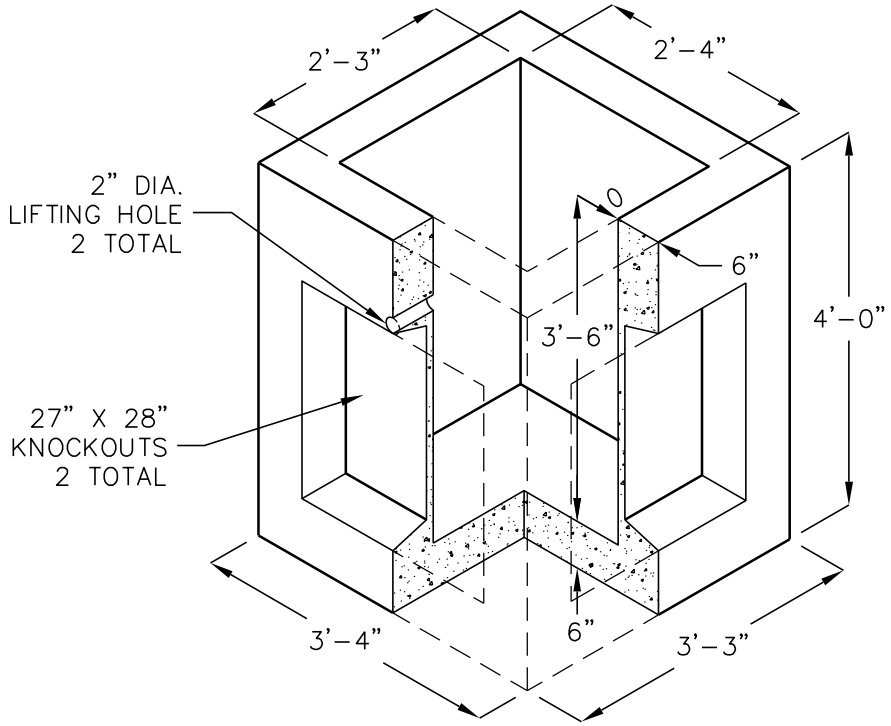


DESIGN LOAD: H-20

FOR COMPLETE DESIGN AND PRODUCT INFORMATION
CONTACT JENSEN PRECAST.

1/25/07
CIG2-48_B.dwg
© 2007 Jensen Precast

JENSEN PRECAST