VALVE BOX

MODEL 8040

MEETS LVVWD SPECIFICATION
PLATE #8

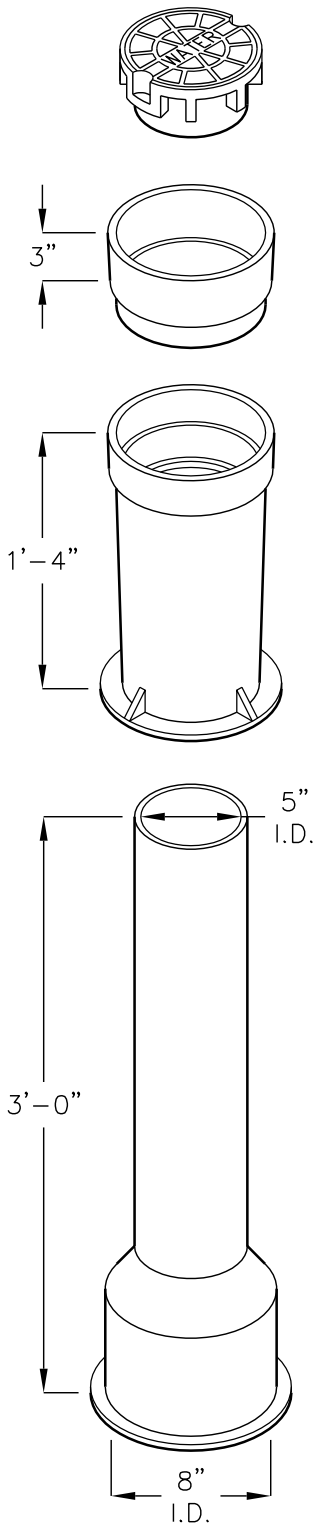

COMPLETE ASSEMBLY		
INCLUDES	PART #	WEIGHT
16" TOP 36" BASE WATER LID	40	90 LBS.

FOR COMPLETE DESIGN
AND PRODUCT INFORMATION
CONTACT JENSEN PRECAST.

12/22/00
LVVWD_8040vb.dwg
© 2000 Jensen Precast

JENSEN PRECAST®