LVVWD 4832 FIBER SPLICE PIT ASSEMBLY

WITH 36" CLEAR OPENING

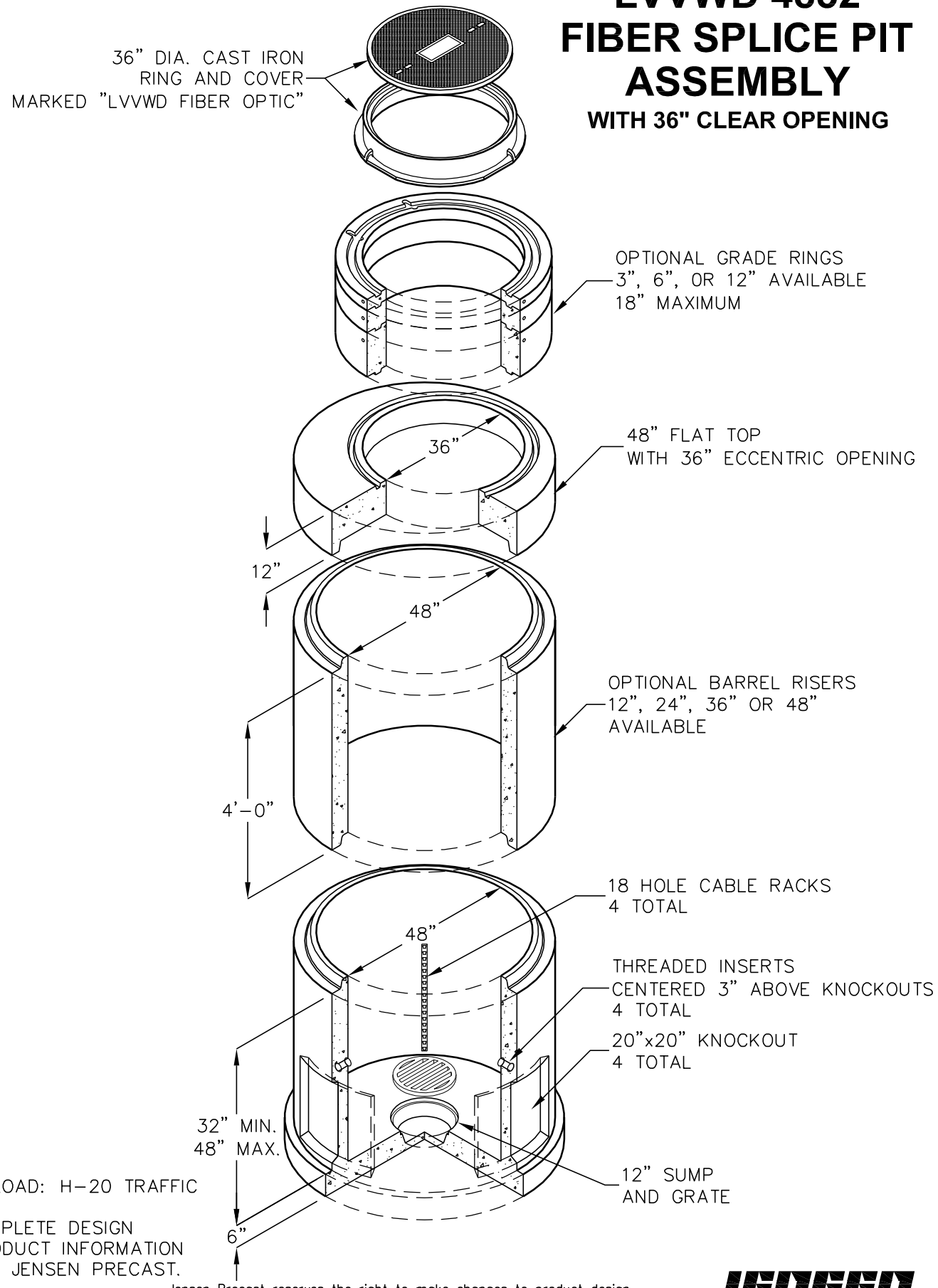

DESIGN LOAD: H-20 TRAFFIC

FOR COMPLETE DESIGN
AND PRODUCT INFORMATION
CONTACT JENSEN PRECAST.

Jensen Precast reserves the right to make changes to product design and/or dimensions without notice. Please contact Jensen Precast whenever necessary for confirmation or advice on product design.

JENSEN PRECAST®

8/26/2008
LVVWD FIBER SPLICE PIT_B.DWG
©2008