6'-0" x 12'-0" AZUSA VAULT x 7'-0" DEEP

NOTES:

- VAULT DESIGNED IN ACCORDANCE with AASHTO H-20-44 TRAFFIC BRIDGE LOADING USING 5,500 PSI [37.92MPa] COMPRESSIVE STRENGTH CONCRETE AND 60,000 PSI [413.2MPa] YIELD STRENGTH ASTM A-706 STEEL REINFORCEMENT PER CALCS. #31094.
- VAULT TO BE PLACED ON A MIN. 6" BASE OF CRUSHER RUN FOR EASE OF INSTALLATION AND EVEN LOAD DISTRIBUTION
- LIMIT OF COVER OVER TOP SECTION IS 1'-6" TO 4'-0"
- LIMIT OF EMBEDMENT OF BOTTOM SECTION IS 10'-8" TO 13'-2"
- ALL WALLS AND CEILINGS TO BE PAINTED with WHITE PAINT
- STRUCTURAL DESIGN APPROVED BY LOS ANGELES COUNTY ROAD AND BRIDGE DEPARTMENT.

FOLLOWING MATERIALS TO BE SHIPPED with VAULT:

(a) 1/2" x 6" GALVANIZED "J" BOLTS (4 REQ'D)
(b) 7/8" x 1 3/4" CONSEAL GASKET (90 FT. REQ'D)

ORDERING INFORMATION:

612FV84-31 FOR ASSEMBLY AS SHOWN
PER CITY OF AZUSA DWG ED18.
TOTAL WEIGHT OF ASSEMBLY IS 32,190 Lbs.

1. UV612-142-11, 42" BOTTOM SECTION, WT. 16,800 lbs.
2. UV612-142-11V, 42" TOP SECTION, WT. 15,390 lbs.
3. 13" x 14" DIA SUMP x 3" DEEP W/RECESS TO ACCOMMODATE SUMP COVER, BOTTOM SECTION (1) CORE MTD.
4. 5" DIA. TERMINATORS, BOTTOM SECTION (24) SHELL MTD. TOP SECTION (16) SHELL MTD.
5. 18" x 18" UNREINFORCED PANEL, TOP SECTION (4) CORE MTD.
6. 10" DIA x 4" DEEP ABS PLASTIC VENT TERMINATORS, TOP SECTION (2) CORE MTD.
7. 7/8" DIA x 6" GALVANIZED PULL IRON, BOTTOM SECTION (4) CORE MTD.; TOP SECTION (4) CORE MTD.
8. 1/2" THREADED BRONZE INSERT BRAZED TO STRUCTURAL STEEL REBAR "GRID" SHALL BE STENCILED IN RED LETTERS (1 1/2" MIN - 2" MAX) ON THE CONCRETE ABOVE EACH INSERT, BOTTOM SECTION (2) CORE MTD.; TOP SECTION (4) CORE MTD.
9. 1/2" LOOP INSERT, TOP SECTION (4) CORE MTD.
10. 1/2" PLASTIC INSERT, TOP SECTION (8) CORE MTD.

NOTCH DETAIL

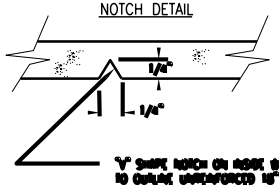

"V" SHAPE NOTCH ON ROOF WALLS TO OUTLINE UNREINFORCED 18" x 18" PANELS

GENERAL NOTES:

1. Minimum soil bearing capacity is hereby assumed to be 2000 PSF unless otherwise documented by a geotechnical report that shall be provided to Jensen Precast by the end user. Jensen Precast shall not be held responsible for the soil bearing capacity.
2. Installation of Manholes, Vaults, Handholes, Meter Boxes etc. will be as per Jensen Installation procedures.
3. Structural modification to the Jensen line of products is not permitted without prior written approval from Jensen Engineering Department.
4. Do not scale the drawings, verify all dimensions including rough openings. If any discrepancies are found, notify the Jensen Engineer immediately.
5. The Jensen Engineer will interpret the intent of the drawings in case of possible conflict or discrepancy.
6. Permissible Variations:
   Dimensional Tolerances - The length, width, height, or dia. measurements of the structure when measured on the inside surfaces shall not deviate form design dimensions by more than the following:

Dimensions:	Tolerance:
0 to 5 Feet	1/4"
5 to 10 Feet	3/8"
10 to 20 Feet as agreed upon between the supplier and purchaser.	

7. Squareness Tolerance:
   The inside of the precast concrete component shall be square as determined by diagonal measurements. The difference between such measurements shall not exceed the following:

Measured Length:	Allowable Difference
0 to 10 Feet	1/2"
10 to 20 Feet	3/4"
20 Feet and over as agreed upon between the supplier and purchaser.	

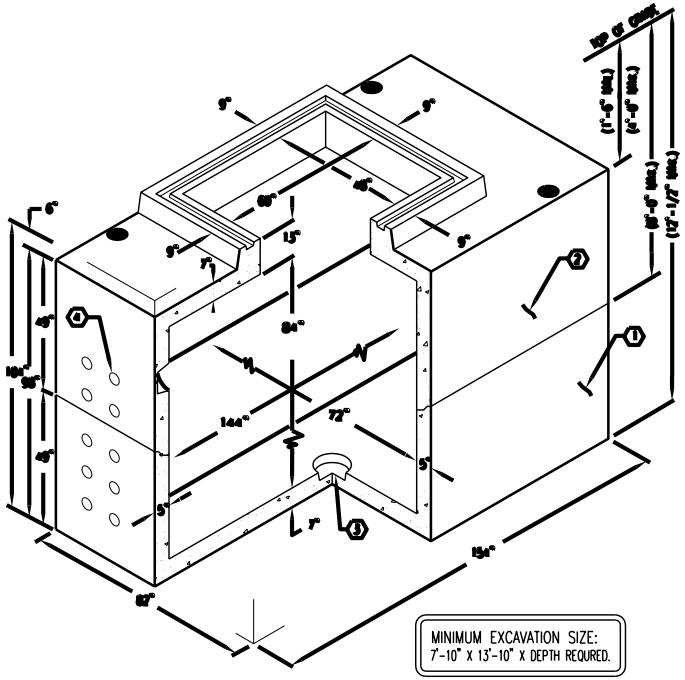

MINIMUM EXCAVATION SIZE:
7'-10" X 13'-10" X DEPTH REQURED.

JENSEN PRECAST

AUTOCAD REL. 14

K612-FV84-31

PER CITY OF AZUSA DWG ED18 03-01-02

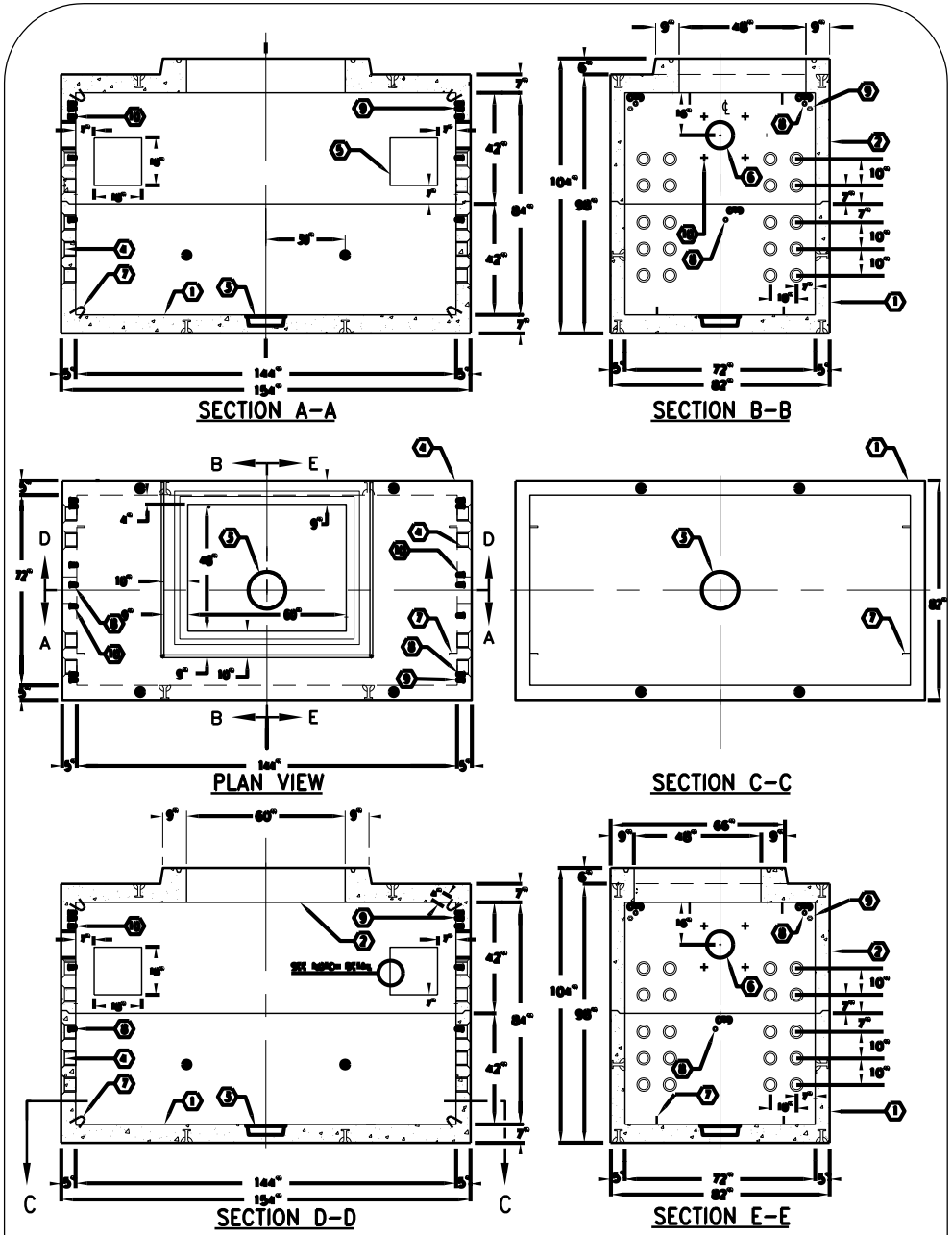

JENSEN PRECAST

#	DATE	DESCRIPTION	BY

K612-FV84-31

PER CITY OF AZUSA DWG ED18 03-01-02