2'-0" x 3'-0" RIVERSIDE FLAT WALL HANDHOLE x 3'-0" DEEP BOTTOMLESS

NOTES:

- HANDHOLE DESIGNED IN ACCORDANCE WITH AASHTO HS 20-44 TRAFFIC BRIDGE LOADING USING 5,500 PSI [37.92 MPa] COMPRESSIVE STRENGTH CONCRETE AND 60,000 PSI [413.2 MPa] YIELD STRENGTH ASTM A-706 STEEL REINFORCEMENT PER CALCS. #31602.
- HANDHOLE TO BE PLACED ON A MIN. 6" BASE OF CRUSHER RUN FOR EASE OF INSTALLATION AND EVEN LOAD DISTRIBUTION.
- COVER DESIGNED FOR HS 20-44 TRAFFIC BRIDGE LOADING PER CALCS #31606 OR PARKWAY LOADING.

ORDERING INFORMATION:

K2436-FH36-21 FOR ASSEMBLY AS SHOWN.
APPROVED FOR CITY OF RIVERSIDE PB-1 OR PB-2
TOTAL WEIGHT OF ASSEMBLY SHOWN AS 1,740 lbs.

1. PB2436F-L18-05, 18" LOWER SECTION. WT. 850 lbs.
2. PB2436F-R12, 12" EXTENSION RING. WT. 567 lbs.
3. PB2436-T6F, 6" TOP SECTION W/ F2436-PB-ANG ANGLE GALVANIZED FRAME (R07-665-1). WT. 189 lbs.
4. ONE PIECE PARKWAY OR TRAFFIC COVER. INCLUDES (2) PICK HOLES, INCLUDES (4) BOLT DOWNS W/ (4) 1/2"-13NC x 2 1/2" PENTAHEAD S.S. BOLTS, MARKED "RIVERSIDE ELECTRIC" BEAD WELD. PAINTED ALUMINIUM. WT. 134. lbs.
5. 8" x 11" KNOCKOUT x 3" DEEP. DRAFT AS FOLLOWS: T=2", S1=2", S2=2", B=0. LOCATE AS FOLLOWS: LOWER SECTION (2) SHELL MTD.
6. 4" x 10" KNOCKOUT x 3" DEEP. DRAFT AS FOLLOWS: T=2", S1=2", S2=2", B=0. LOCATE AS FOLLOWS: LOWER SECTION (2) SHELL MTD.
7. O 1/2" P-35-T OB INSERT W/CLEAN-OUT HOLE. LOCATE AS FOLLOWS: TOP SECTION (4) SHELL MTD.
8. ⊚ 1/2" P-36-T INSERT LOCATE AS FOLLOWS: TOP SECTION (2) SHELL MTD.; LOWER SECTION (2) SHELL MTD.

GENERAL NOTES:

1. Minimum soil bearing capacity is hereby assumed to be 2000 PSF unless otherwise documented by a geotechnical report that shall be provided to Jensen Precast by the end user. Jensen Precast shall not be held responsible for the soil bearing capacity.
2. Installation of Manholes, Vaults, Handholes, Meter Boxes etc. will be as per Jensen installation procedures.
3. Structural modification to the Jensen line of products is not permitted without prior written approval from Jensen Engineering Department.
4. Do not scale the drawings, verify all dimensions including rough openings, if any discrepancies are found, notify the Jensen Engineer immediately.
5. The Jensen Engineer will interpret the intent of the drawings in case of possible conflict or discrepancy.
6. Permissible Variations:
   Dimensional Tolerances – The length, width, height, or dia. measurements of the structure when measured on the inside surfaces shall not deviate form design dimensions by more than the following:

Dimensions:	Tolerance:
0 to 5 Feet	1/4"
5 to 10 Feet	3/8"
10 to 20 Feet as agreed upon between the supplier and purchaser.	

7. Squareness Tolerance:
   The inside of the precast concrete component shall be square as determined by diagonal measurements. The difference between such measurements shall not exceed the following:

Measured Length:	Allowable Difference
0 to 10 Feet	1/2"
10 to 20 Feet	3/4"
20 Feet and over as agreed upon between the supplier and purchaser.	

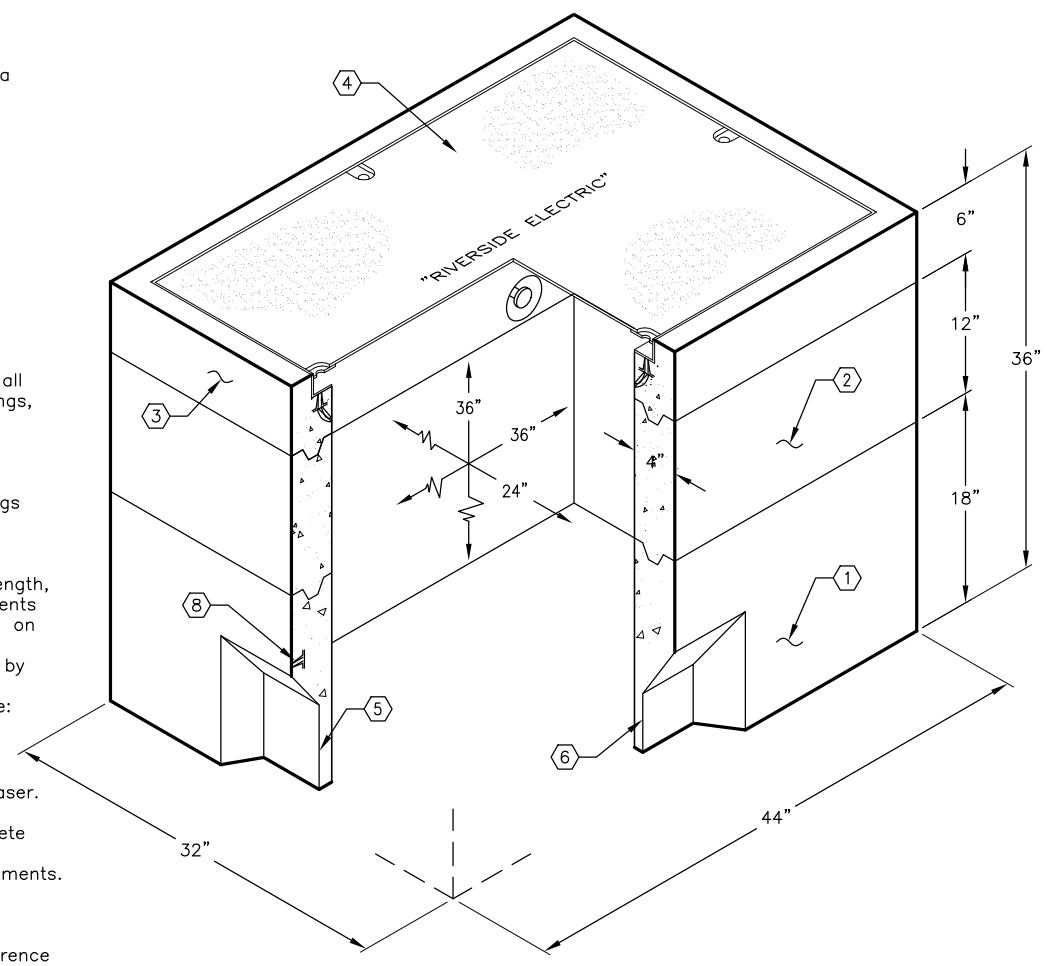

MINIMUM EXCAVATION SIZE:
3'-2" x 4'-2" x DEPTH REQ'D.

JENSEN PRECAST®

AUTOCAD REL. 14

K2436-FH36-21
PER CITY OF RIVERSIDE PB-1 OR PB-2 03-01-02

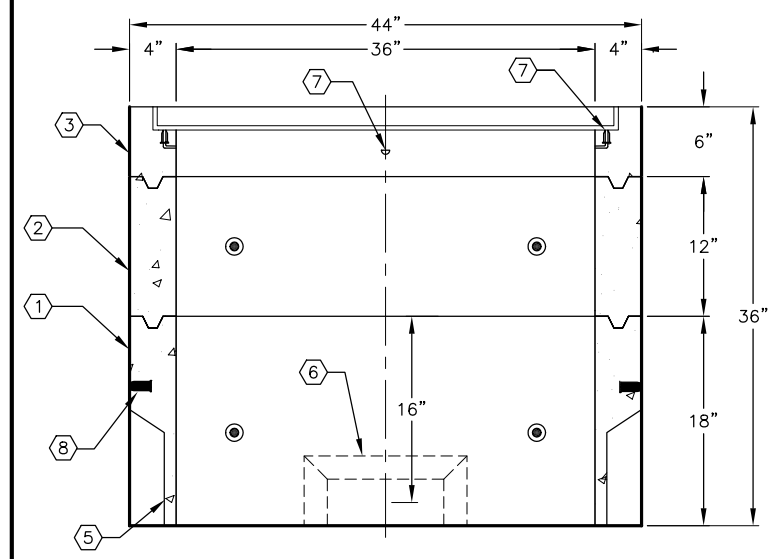

SECTION A-A

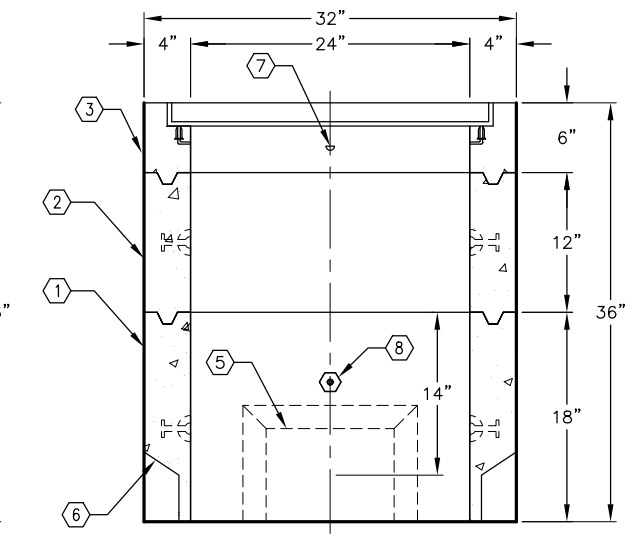

SECTION B-B

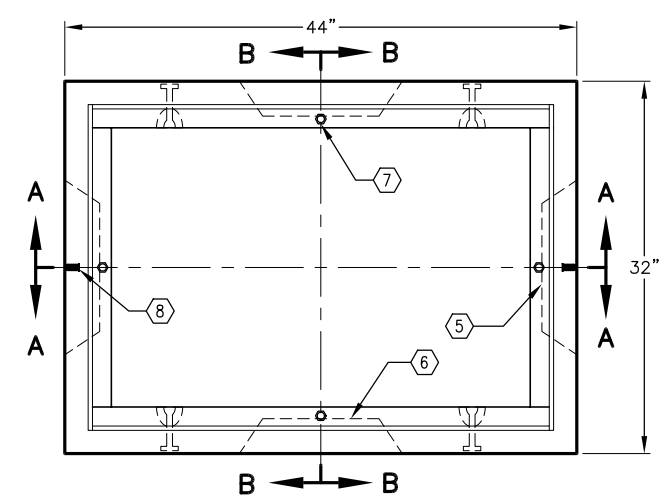

PLAN VIEW

JENSEN PRECAST®

#	DATE	DESCRIPTION	BY

K2436-FH36-21
PER CITY OF RIVERSIDE PB-1 OR PB-2 03-01-02